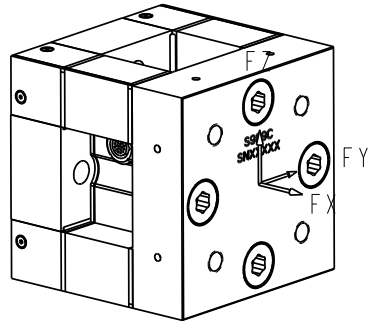

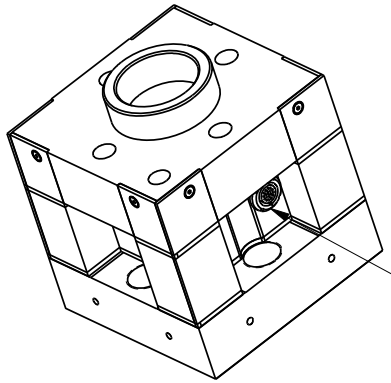

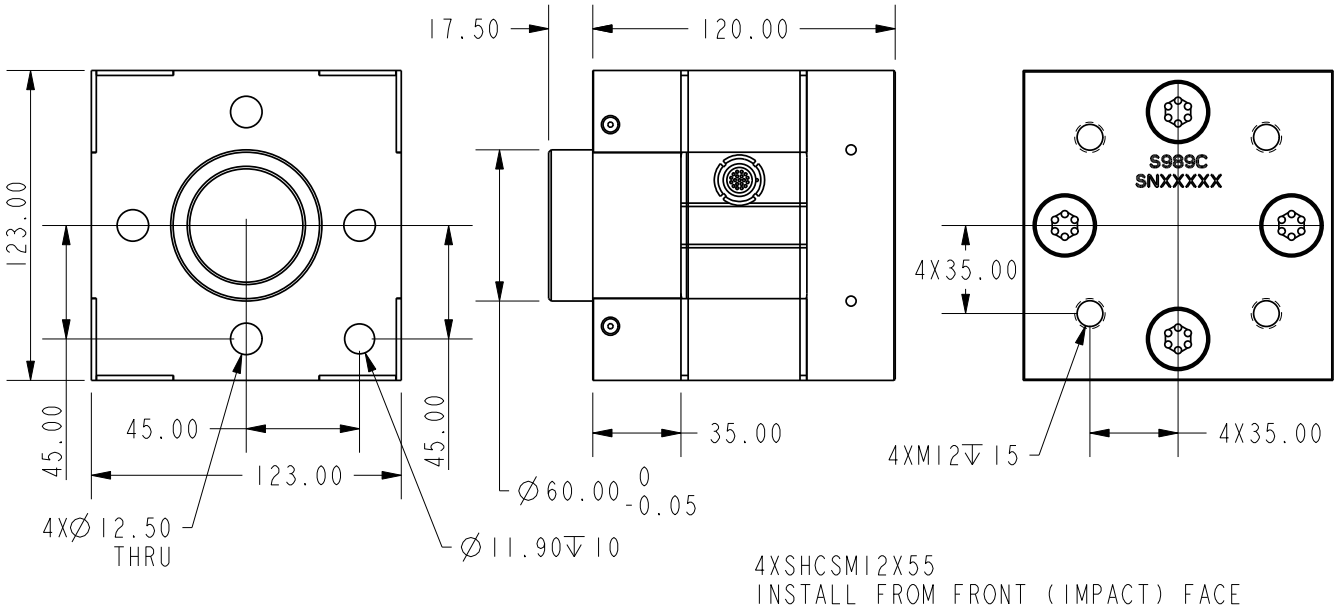

LEMO CONNECTOR
EEG.2B.319.CLL
MATING CONNECTOR
FGG.2B.319.CLAD52Z

POLARITY PER RIGHT HAND RULE, COORDINATE SYSTEM AS SHOWN. IMPACT FORCE (COMPRESSION) GENERATES NEGATIVE FX

	Fx	Fy	Fz	Mx	My	Mz
CAPACITY (N/Nm)	400kN	100kN	100kN	NA	NA	NA
OUTPUT (mV/V)	1.3	2.0	2.0	NA	NA	NA
BRIDGE RES. (Ω)	350	350	350	NA	NA	NA

LEMO PIN ASSIGNMENT

PIN #	FUNCTION	PIN #	FUNCTION	PIN #	FUNCTION
1	CH1+/FX+	8	-CH4/-MX	15	+E(CH3)
2	CH1-/FX-	9	+CH5/+MY	16	+E(CH4)
3	CH2+/FY+	10	-CH5/-MY	17	+E(CH5)
4	-CH2/-FY	11	+CH6/+MZ	18	+E(CH6)
5	+CH3/+FZ	12	-CH6/-MZ	19	-E(CH1-CH6)
6	-CH3/-FZ	13	+E(CH1)		
7	+CH4/+MX	14	+E(CH2)		

SPECIFICATIONS

EXCITATION MAX. (V)	5
OVERLOAD CAPACITY (%F.S.)	150
FREE AIR RESONANT FREQ. (HZ.)	3500
CROSSTALK (%F.S.)	3.0
NON-LINEARITY (%F.S.)	0.5
HYSTERESIS (%F.S.)	0.5
OPERATING TEMP. RANGE (°C)	-40 TO +90
MASS (KG)	9.0

SUNRISE INSTRUMENTS

www.srisensor.com

CRASH WALL LOAD CELL
400kN

UNLESS OTHERWISE SPECIFIED DIMENSIONS ARE IN MM

S989C

REV. A