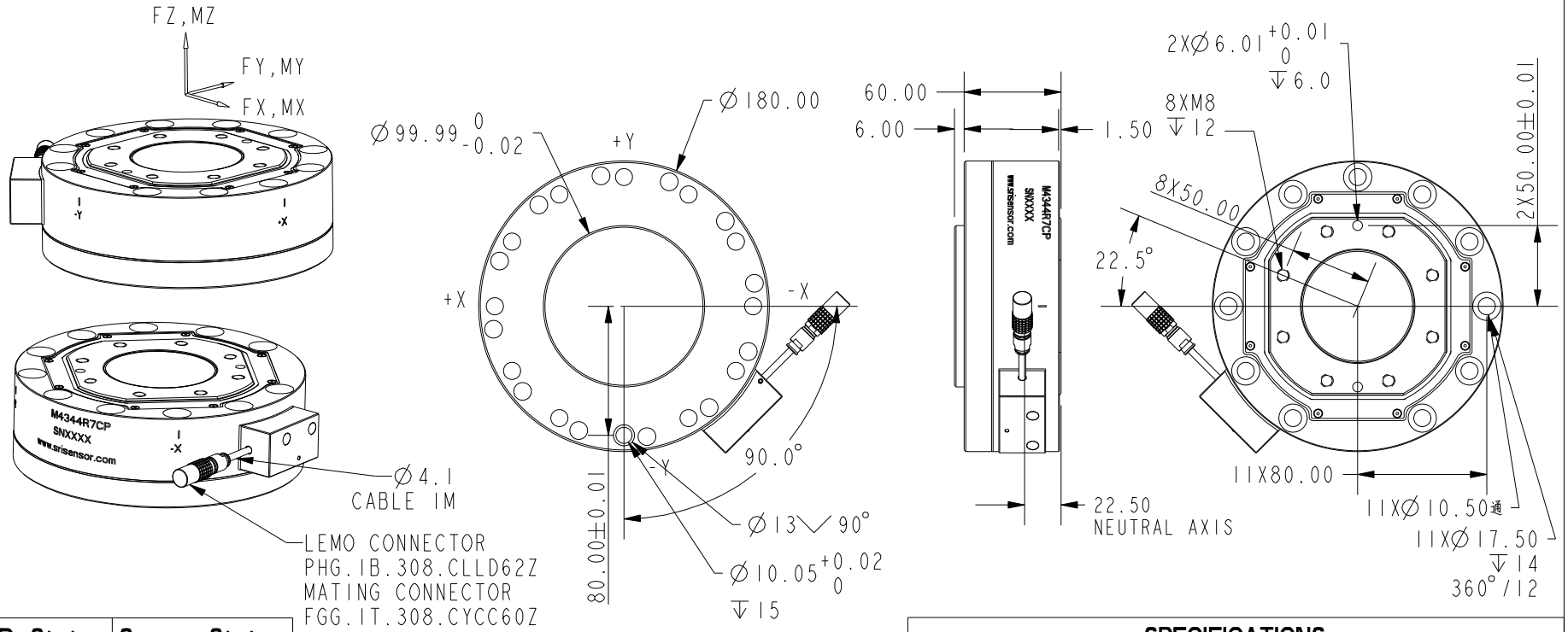

LED Status	Sensor Status
off	power off
fliker	work properly
on	abnormal

THE OUTPUT IS POSITIVE WHEN THE LOAD IS APPLIED TO THE TOOL SIDE
PER COORDINATE AS SHOWN. ALL CHANNELS ARE STRUCTURALLY DECOUPLED
EMBEDDED AMPLIFIER INLCUDED.

	Fx	Fy	Fz	Mx	My	Mz
CAPACITY (N/Nm)	4000	4000	6000	/	/	/
OUTPUT	ETHERCAT					

RESOLUTION IS DEFINED WITH VISIBLE CHANGE WHEN MINIMUM LOAD IS QUICKLY APPLIED OR REMOVED AT 200 HZ SAMPLING RATE

CONNECTOR PIN ASSIGNMENT

PIN # / COLOR	FUNCTION	PIN # / COLOR	FUNCTION
1 BLUE	+24V	5 WHITE/GREEN	RDP
2 WHITE/BLUE	GND	6 GREEN	RDN
3 WHITE/ORANGE	TDP	7 WHITE/BROWN	RX
4 ORANGE	TDN	8 BROWN	TX

SPECIFICATIONS

POWER SUPPLY (V)	24V
OVERLOAD CAPACITY (%F.S.)	200
FREE AIR RESONANT FREQ. (HZ.)	4000
CROSSTALK (%F.S.)	3.0
ACCURACY (%F.S.)	0.5
OPERATING TEMP. RANGE (°C)	-40 TO +100
COMPENSATED TEMP. RANGE (°C)	10 TO 70
MASS (KG)	8.1

SUNRISE INSTRUMENTS

www.srisensor.com

THREE AXIS CIRCULAR LOAD CELL, DECOUPLED
ETHERCAT OUTPUT D180MM F6KN,IP67

UNLESS OTHERWISE SPECIFIED DIMENSIONS ARE IN MM	M4344R7CP-3X	REV. A