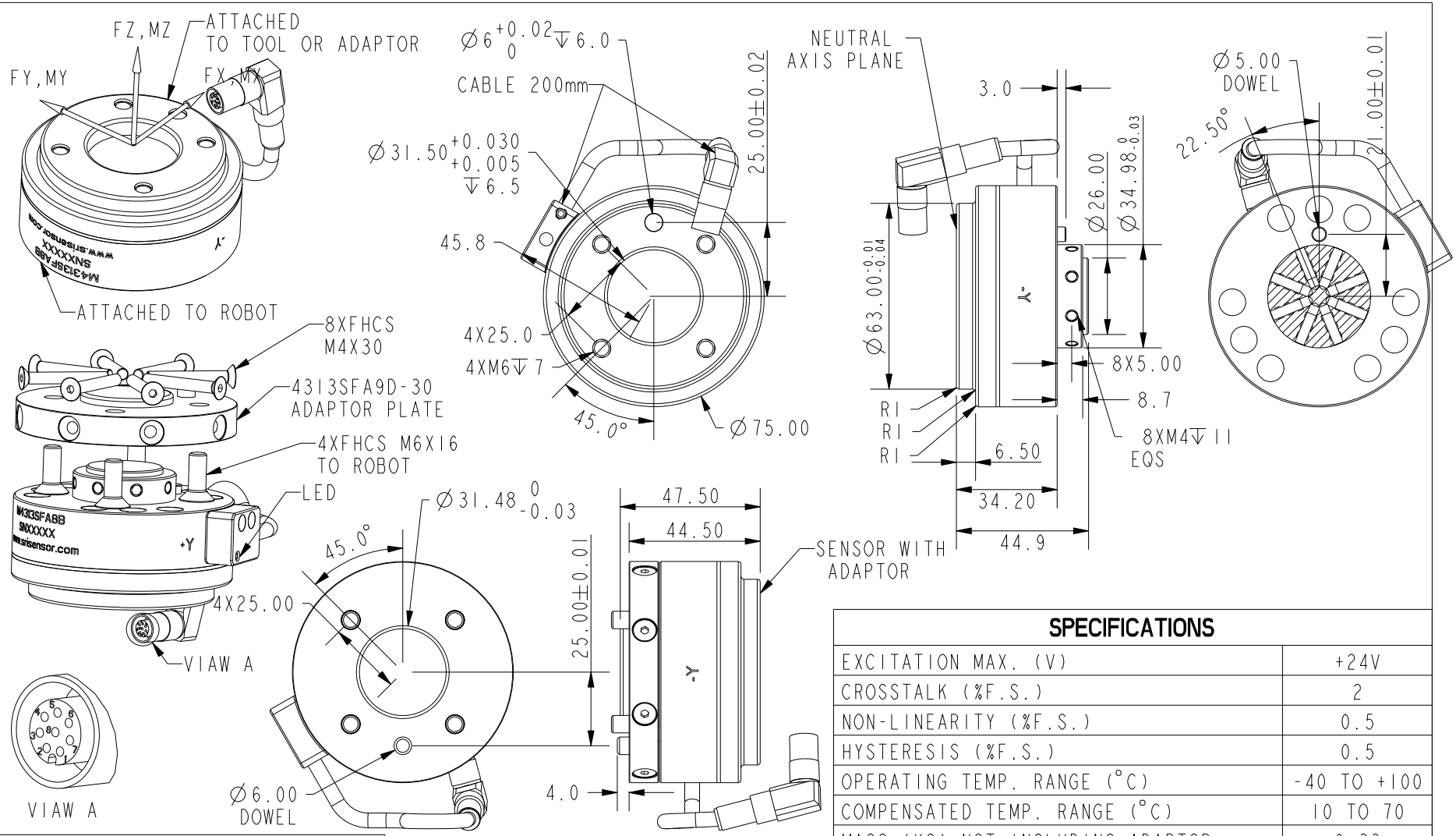

SPECIFICATIONS

EXCITATION MAX. (V)	+24V
CROSSTALK (%F.S.)	2
NON-LINEARITY (%F.S.)	0.5
HYSTERESIS (%F.S.)	0.5
OPERATING TEMP. RANGE (°C)	-40 TO +100
COMPENSATED TEMP. RANGE (°C)	10 TO 70
MASS (KG) NOT INCLUDING ADAPTOR	0.33

M8 CONNECTOR PIN ASSIGNMENT

PIN #	FUNCTION	PIN #	FUNCTION
1 WHITE	RS485+	5 GRAY	+24V
2 BROWN	RS485-	6 PINK	NA
3 GREEN	RX	7 BLUE	NA
4 YELLOW	TX	8 RED	GND

PATENT NO.:202322769210.4

LED STATUS	SENSOR STATUS
OFF	POWER OFF
FLIKER	WORK PROPERLY
ON	ABNORMAL

	Fx	Fy	Fz	Mx	My	Mz
CAPACITY (N/Nm)	500N	500N	500N	50Nm	50Nm	50Nm
OVERLOAD CAPACITY	2500N	2500N	2500N	250Nm	250Nm	250Nm

SUNRISE INSTRUMENTS

www.srisensor.com

SIX AXIS CIRCULAR LOAD CELL
D75MM, DIGITAL(RS485) OUTPUT

UNLESS OTHERWISE SPECIFIED DIMENSIONS ARE IN MM

M4313SFA8B

REV. A