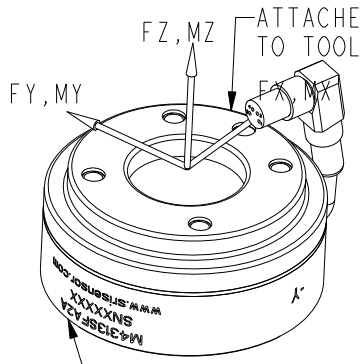

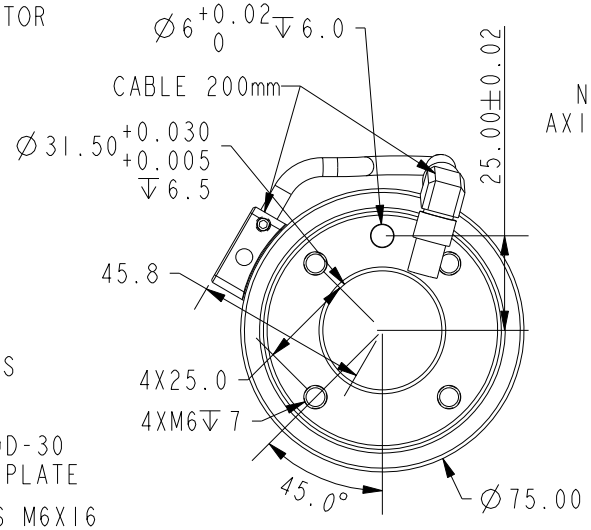

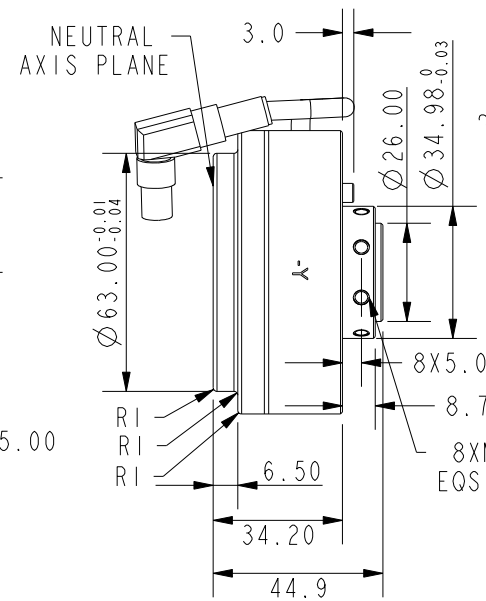

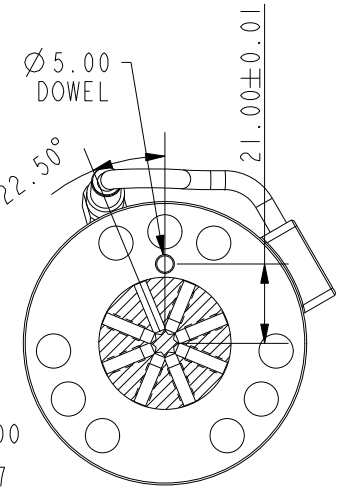

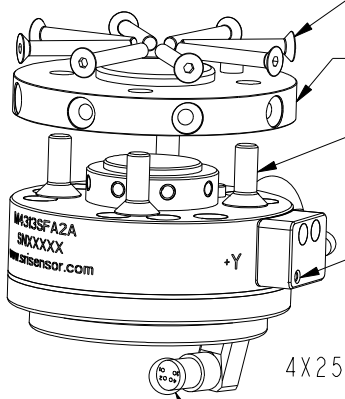

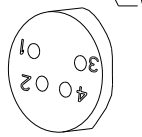

VIEW A
SCALE 2.0

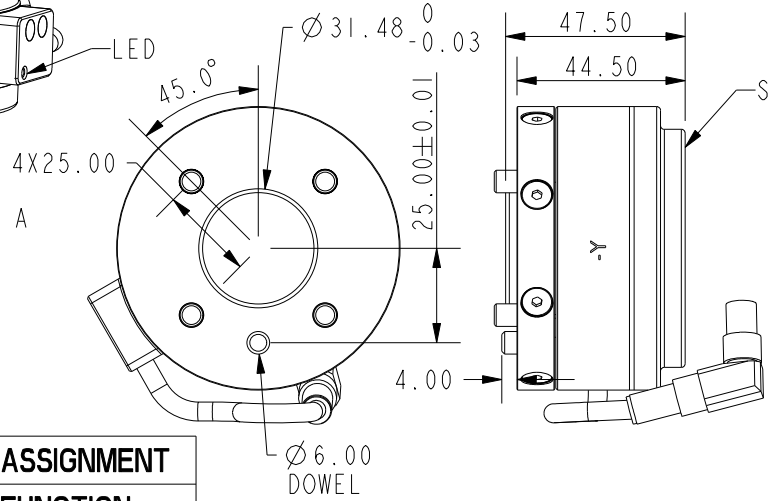

PATENT NO.:202322769210.4

SPECIFICATIONS

EXCITATION MAX. (V)	+24V
CROSSTALK (%F.S.)	2
NON-LINEARITY (%F.S.)	0.5
HYSTERESIS (%F.S.)	0.5
OPERATING TEMP. RANGE (°C)	-40 TO +100
COMPENSATED TEMP. RANGE (°C)	10 TO 70
MASS (KG) NOT INCLUDING ADAPTOR	0.33

M8 CONNECTOR PIN ASSIGNMENT

PIN #	FUNCTION
1 BROWN	+24V
2 WHITE	RS485A
3 BLUE	RS485B
4 BLACK	GND

LED STATUS	SENSOR STATUS
OFF	POWER OFF
FLIKER	WORK PROPERLY
ON	ABNORMAL

	Fx	Fy	Fz	Mx	My	Mz
CAPACITY (N/Nm)	100N	100N	100N	10Nm	10Nm	10Nm
OVERLOAD CAPACITY	500N	500N	500N	50Nm	50Nm	50Nm

SUNRISE INSTRUMENTS

www.srisensor.com

SIX AXIS CIRCULAR LOAD CELL
D75MM, DIGITAL(RS485) OUTPUT

UNLESS OTHERWISE SPECIFIED DIMENSIONS ARE IN MM

M4313SFA2A

REV. A