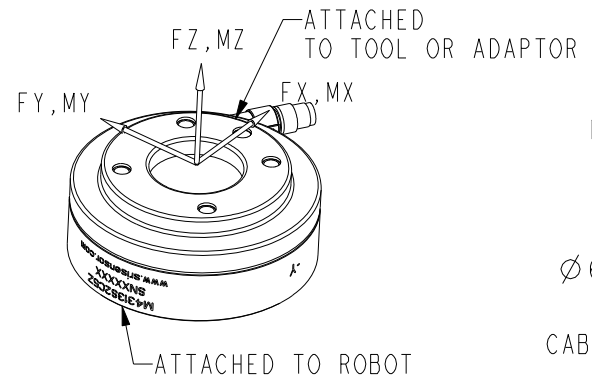

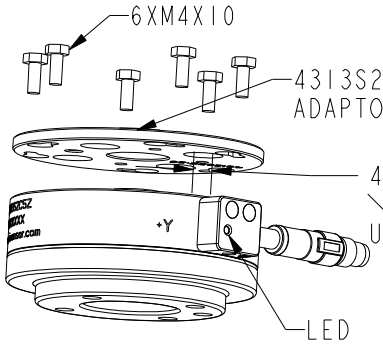

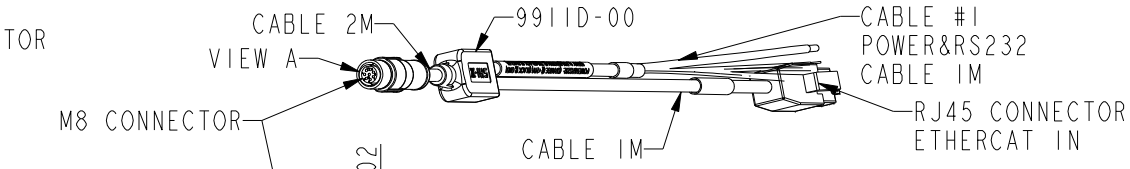

VIEW A
SCALE 2.0

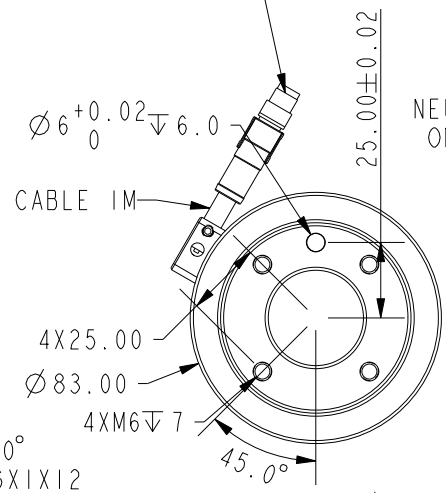

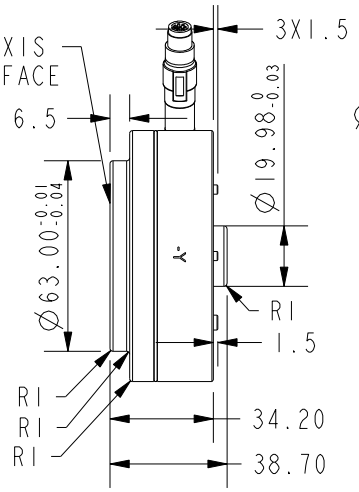

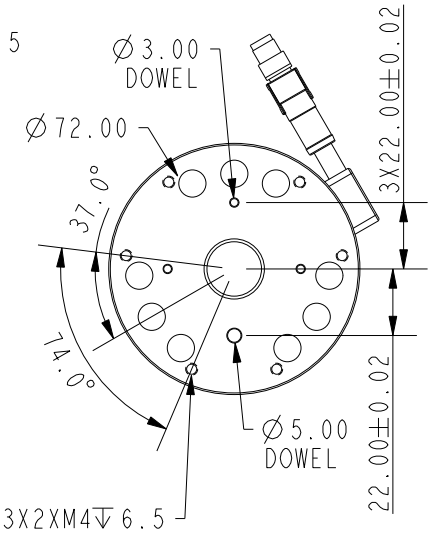

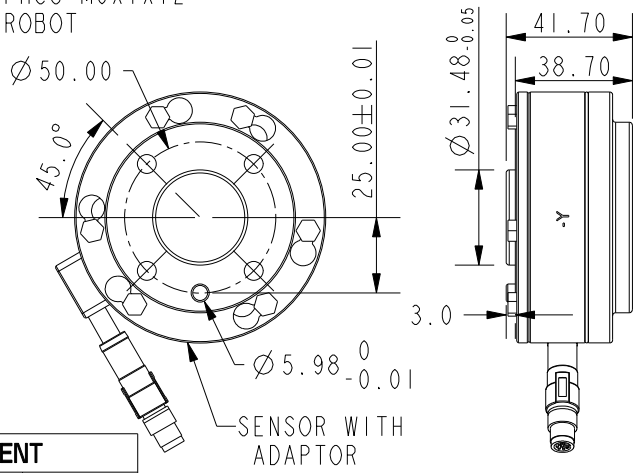

PATENT NO.:202322769210.4

CABLE #1	
COLOR	**FUNCTION**
ORANGE	+24V
BLACK	GND
GRAY	RX
BROWN	TX

M8 CONNECTOR PIN ASSIGNMENT					
PIN#	**FUNCTION**	**COLOR**	**PIN#**	**FUNCTION**	**COLOR**
1	+24V	ORANGE	5	RXP	YELLOW
2	GND	BLACK	6	RXN	GREEN
3	TXP	BLUE	7	RX	GRAY
4	TXN	WHITE	8	TX	BROWN

LED STATUS	SENSOR STATUS
OFF	POWER OFF
FLIKER	WORK PROPERLY
ON	ABNORMAL

	Fx	Fy	Fz	Mx	My	Mz
CAPACITY (N/Nm)	250N	250N	250N	25Nm	25Nm	25Nm
OVERLOAD CAPACITY	1250N	1250N	1250N	125Nm	125Nm	125Nm

SPECIFICATIONS	
EXCITATION MAX. (V)	+24V
CROSSTALK (%F.S.)	2
NON-LINEARITY (%F.S.)	0.5
HYSTERESIS (%F.S.)	0.5
OPERATING TEMP. RANGE (°C)	-40 TO +100
COMPENSATED TEMP. RANGE (°C)	10 TO 70
MASS (kg) NOT INCLUDING ADAPTOR	0.4

SUNRISE INSTRUMENTS

www.srisensor.com

SIX AXIS CIRCULAR LOAD CELL
D83MM, ETHERCAT OUTPUT

UNLESS OTHERWISE SPECIFIED
DIMENSIONS ARE IN MM

M4313S2C5Z

REV. A