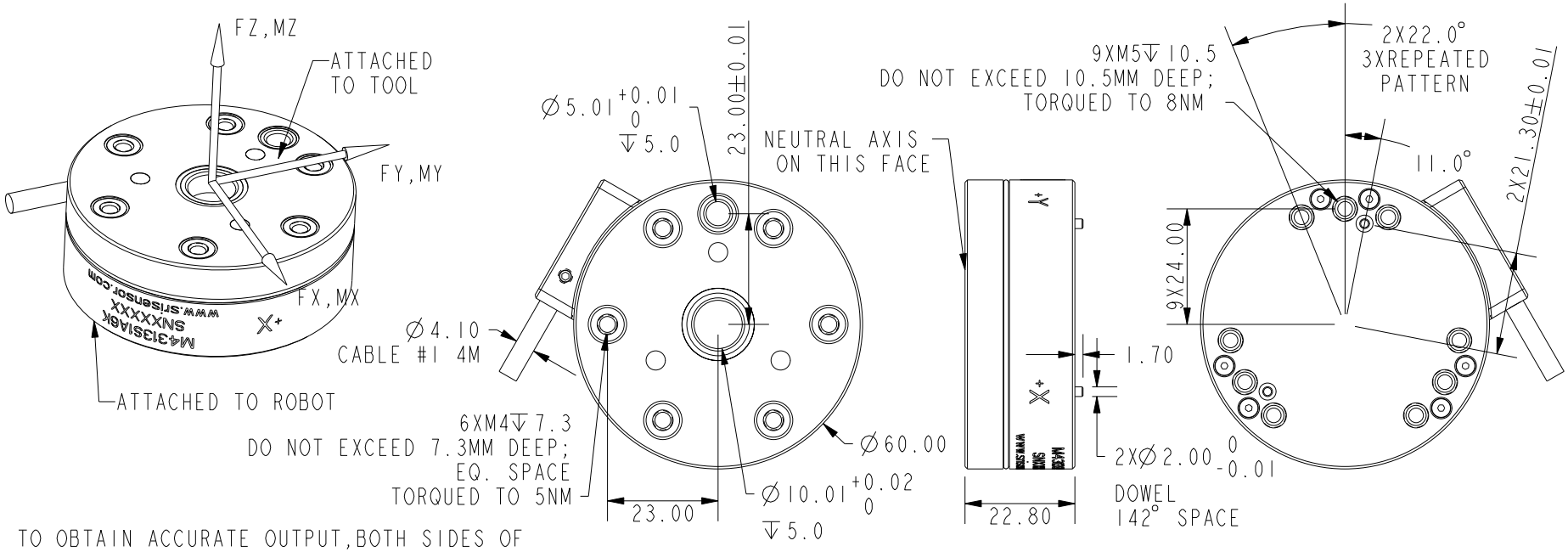

TO OBTAIN ACCURATE OUTPUT,BOTH SIDES OF THE SENSOR MUST BE MOUNTED WITH A METAL PLATE WITH MIN. 8MM THICK

IP PROTECTION:IP60

SUFFICIENT DYNAMIC RANGE FOR ZERO OFFSET UP TO 120% F.S.

CABLE #1

COLOR	FUNCTION	COLOR	FUNCTION
ORANGE	11 TO 25V	WHITE	RS485B
GRAY	RX	YELLOW	/
BROWN	TX	GREEN	/
BLUE	RS485A	BLACK	GND

LED STATUS	SENSOR STATUS
OFF	POWER OFF
FLIKER	WORK PROPERLY
ON	ABNORMAL

SPECIFICATIONS

POWER SUPPLY (V)	11 TO 25
OVERALL ACCURACY (%F.S.)	1.5
OPERATING TEMP. RANGE (°C)	-20 TO +90
DIGITAL OUTPUT	RS485
SAMPLING RATE (Hz)	2000
MASS (NOT INCLUDING CABLE)	235±10G

	Fx	Fy	Fz	Mx	My	Mz
CAPACITY	300N	300N	300N	60Nm	60Nm	60Nm
OVERLOAD CAPACITY	1500N	1500N	1500N	120Nm	120Nm	120Nm

PEAK-TO-PEAK NOISE = 6.6 X RMS NOISE (EFFECTIVE RESOLUTION)
NOISE IS MEASURED AT SAMPLING RATE 2000HZ

PEAK-TO-PEAK NOISE	2.97N	2.0N	1.6N	0.036Nm	0.041Nm	0.052Nm
EFFECTIVE RESOLUTION	0.45N	0.31N	0.24N	0.005Nm	0.006Nm	0.008Nm

SUNRISE INSTRUMENTS

www.srisensor.com

SIX AXIS CIRCULAR LOAD CELL
D60MM, F300N, RS485 OUTPUT

UNLESS OTHERWISE SPECIFIED DIMENSIONS ARE IN MM

M4313SIA6K

REV. 0.1