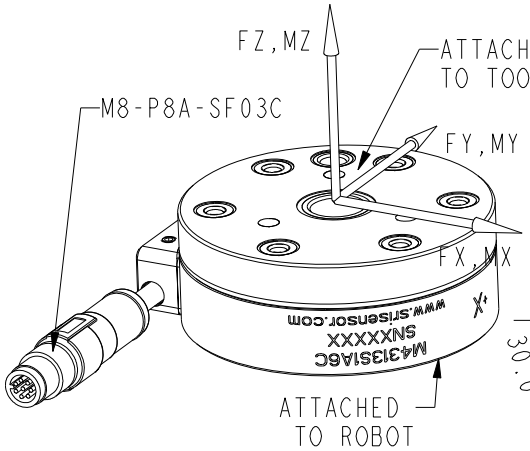

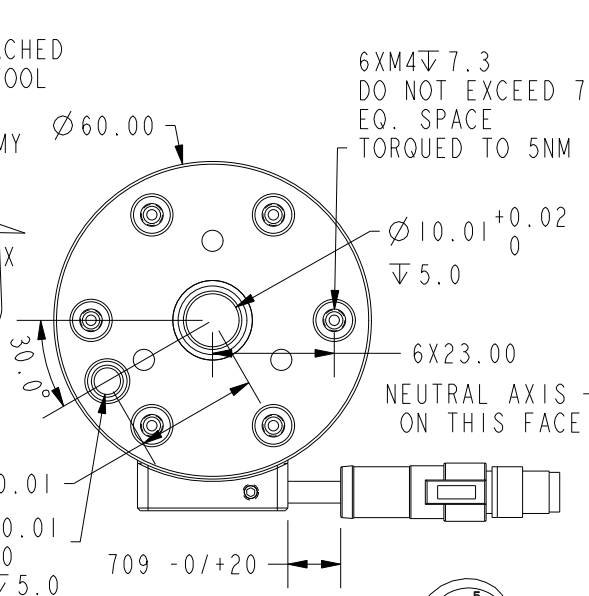

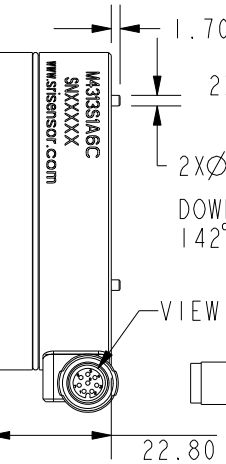

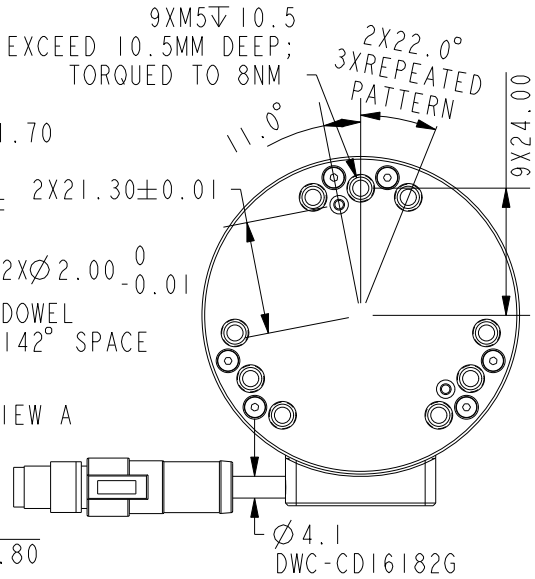

STIFFNESS:
FX:8.0E+07 N/m
FY:6.0E+07 N/m
FZ:1.6E+08 N/m
MX:3.6E+04Nm/rad
MY:2.3E+04Nm/rad
MZ:3.3E+04Nm/rad

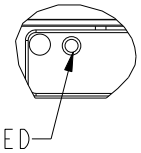

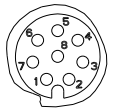

LED STATUS	SENSOR STATUS
OFF	POWER OFF
FLIKER	WORK PROPERLY
ON	ABNORMAL

CONNECTOR PINOUT	
PIN #	FUNCTION
1	RX(RS232)
2	TX(RS232)
3	RS485A
4	RS485B
5	11 TO 25V
6	GND
7	NC
8	NC
SHELL	SHIELD

CALIBRATION: EOAT 7 HARDWARE

IP PROTECTION:IP60

SUFFICIENT DYNAMIC RANGE FOR ZERO OFFSET UP TO 120% F.S.

CONNECTOR COMPLIANT WITH IEC 61076-2-104 AND COMPATIBLE WITH MATING RECEPTACLE AMPHENOL M8S-08PFFP-SF8001

SPECIFICATIONS	
POWER SUPPLY (V)	11 TO 25
OVERALL ACCURACY (%F.S.)	1.5
OPERATING TEMP. RANGE (°C)	-20 TO +80
DIGITAL OUTPUT	RS485
SAMPLING RATE (Hz)	2000
FREE AIR RESONANT FREQ. (Hz)	1060
MASS (NOT INCLUDING CABLE)	115±10G

	Fx	Fy	Fz	Mx	My	Mz
CAPACITY	300N	300N	300N	60Nm	60Nm	60Nm
OVERLOAD CAPACITY	1500N	1500N	1500N	120Nm	120Nm	120Nm

PEAK-TO-PEAK NOISE = 6.6 X RMS NOISE (EFFECTIVE RESOLUTION)
NOISE IS MEASURED AT SAMPLING RATE 2000HZ

PEAK-TO-PEAK NOISE	0.8N	0.7N	0.8N	0.015Nm	0.015Nm	0.016Nm
EFFECTIVE RESOLUTION	0.12N	0.11N	0.12N	0.002Nm	0.002Nm	0.002Nm

SUNRISE INSTRUMENTS

www.srisensor.com

SIX AXIS CIRCULAR LOAD CELL
D60MM, F300N, RS485 OUTPUT

UNLESS OTHERWISE SPECIFIED DIMENSIONS ARE IN MM

M4313S1A6C

REV. 0.1