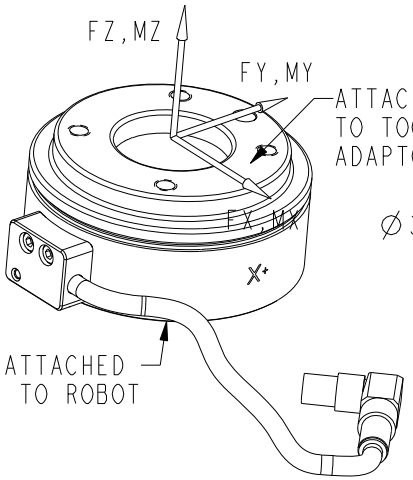

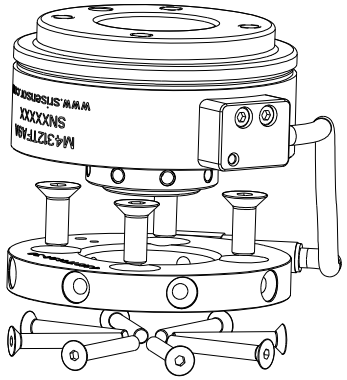

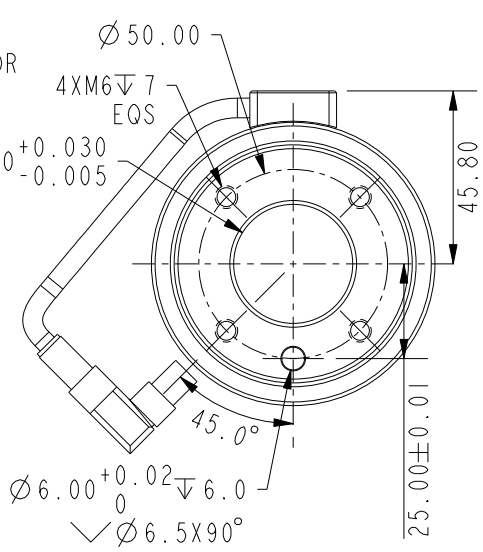

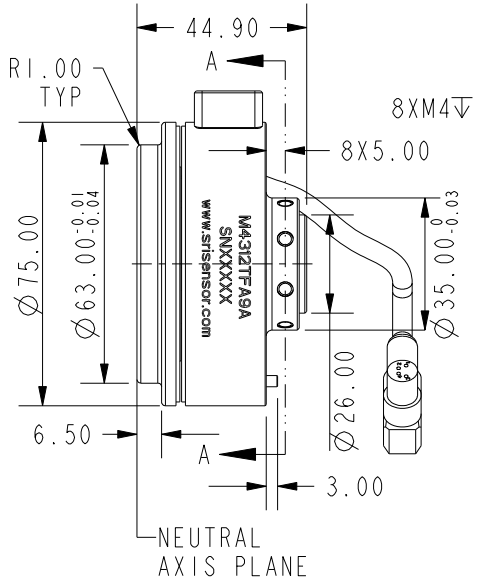

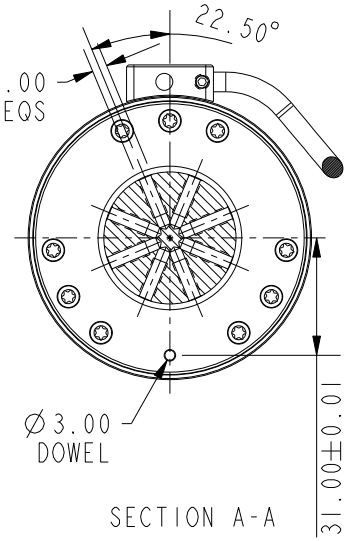

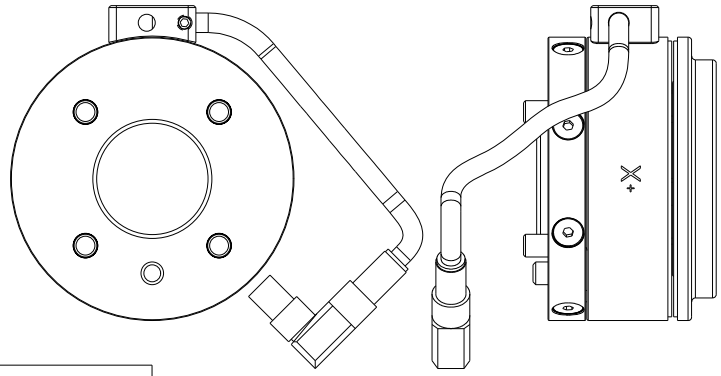

SPECIFICATIONS	
EXCITATION MAX. (V)	+24V
CROSSTALK (%F.S.)	2
NON-LINEARITY (%F.S.)	0.5
HYSTERESIS (%F.S.)	0.5
OPERATING TEMP. RANGE (°C)	-40 TO +100
COMPENSATED TEMP. RANGE (°C)	10 TO 70
MASS (KG) NOT INCLUDING ADAPTOR	0.33

M8 CONNECTOR PIN ASSIGNMENT	
PIN #	FUNCTION
1 BROWN	+24V
2 WHITE	RS485A
3 BLUE	RS485B
4 BLACK	GND

PATENT NO.:202322769210.4

LED STATUS	SENSOR STATUS
OFF	POWER OFF
FLIKER	WORK PROPERLY
ON	ABNORMAL

	Fx	Fy	Fz	Mx	My	Mz
CAPACITY (N/Nm)	600N	600N	600N	60Nm	60Nm	60Nm
OVERLOAD CAPACITY	1800N	1800N	1800N	180Nm	180Nm	180Nm

SUNRISE INSTRUMENTS

www.srisensor.com

SIX AXIS CIRCULAR LOAD CELL
D75MM, DIGITAL(RS485) OUTPUT

UNLESS OTHERWISE SPECIFIED DIMENSIONS ARE IN MM

M4312TFA9A

REV. 0.1