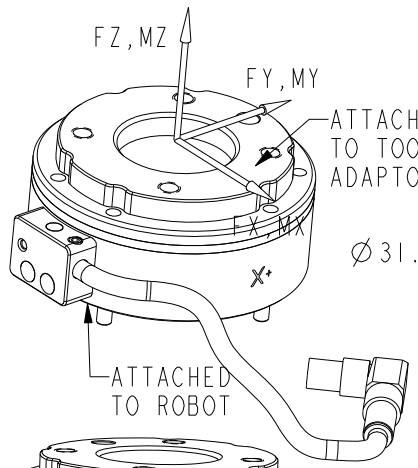

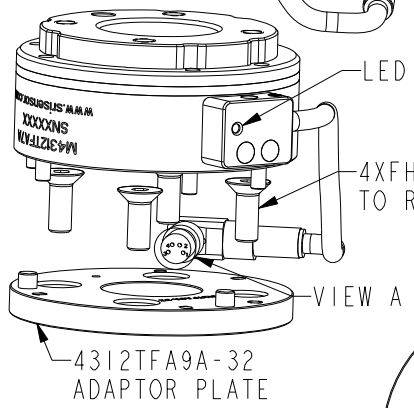

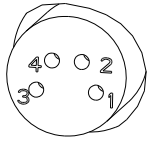

VIEW A
SCALE 2.0

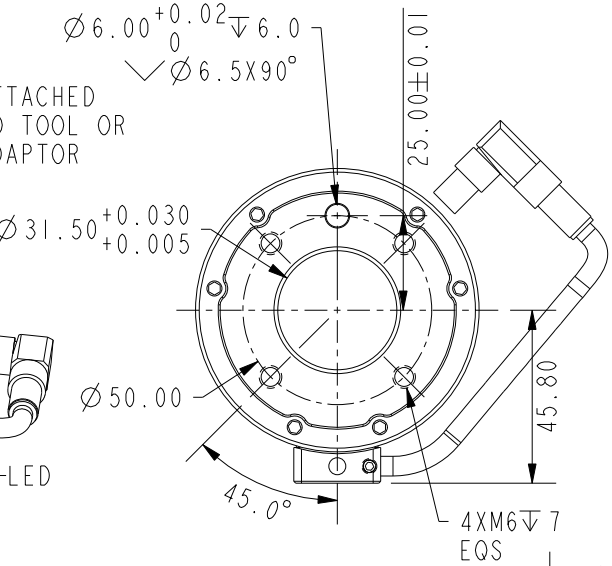

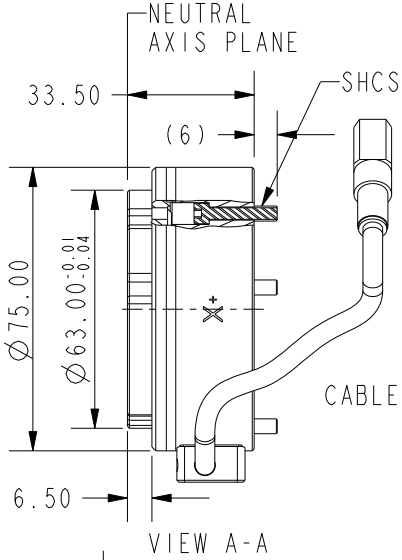

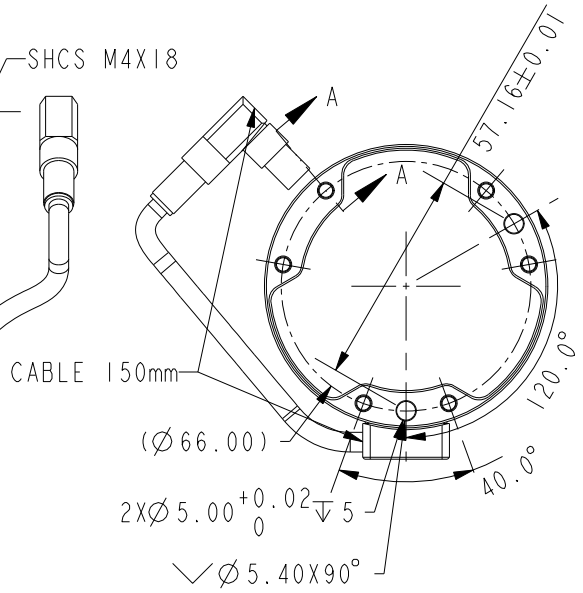

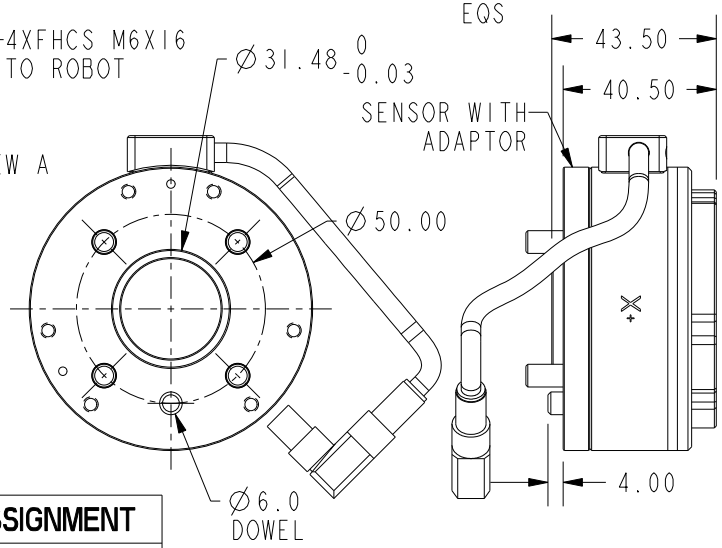

SPECIFICATIONS	
POWER SUPPLY	22~50V(DC)
CROSSTALK (%F.S.)	2
NON-LINEARITY (%F.S.)	0.5
HYSTERESIS (%F.S.)	0.5
OPERATING TEMP. RANGE (°C)	-40 TO +100
COMPENSATED TEMP. RANGE (°C)	10 TO 70
MASS (KG) NOT INCLUDING ADAPTOR	0.27

M8 CONNECTOR PIN ASSIGNMENT	
PIN #	FUNCTION
1 BROWN	22~50V(DC)
2 WHITE	RS485A
3 BLUE	RS485B
4 BLACK	GND

LED STATUS	SENSOR STATUS
OFF	POWER OFF
FLIKER	WORK PROPERLY
ON	ABNORMAL

	Fx	Fy	Fz	Mx	My	Mz
CAPACITY (N/Nm)	400N	400N	400N	40Nm	40Nm	40Nm
OVERLOAD CAPACITY	1200N	1200N	1200N	120Nm	120Nm	120Nm

SUNRISE INSTRUMENTS

www.srisensor.com

SIX AXIS CIRCULAR LOAD CELL
D75MM, DIGITAL(RS485) OUTPUT

UNLESS OTHERWISE SPECIFIED DIMENSIONS ARE IN MM

M4312TFA7A

REV. 0.1