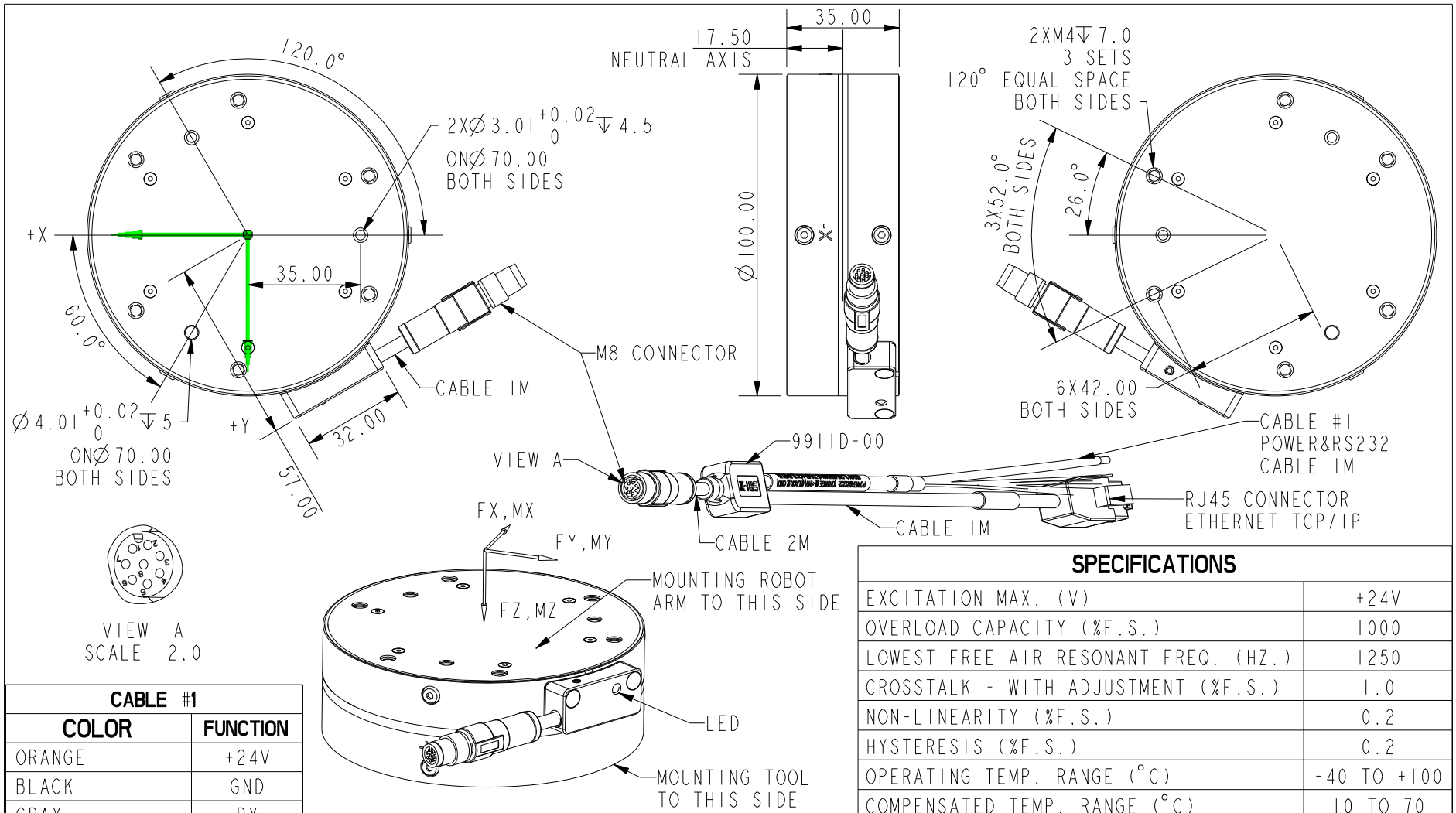

CABLE #1	
COLOR	**FUNCTION**
ORANGE	+24V
BLACK	GND
GRAY	RX
BROWN	TX

M8 CONNECTOR PIN ASSIGNMENT					
PIN#	**FUNCTION**	**COLOR**	**PIN#**	**FUNCTION**	**COLOR**
1	+24V	ORANGE	5	RXP	YELLOW
2	GND	BLACK	6	RXN	GREEN
3	TXP	BLUE	7	RX	GRAY
4	TXN	WHITE	8	TX	BROWN

THE OUTPUT IS POSITIVE WHEN THE LOAD IS APPLIED TO THE TOOL SIDE PER COORDINATE AS SHOWN.

LED STATUS	SENSOR STATUS
OFF	POWER OFF
FLIKER	WORK PROPERLY
ON	ABNORMAL

	Fx	Fy	Fz	Mx	My	Mz
CAPACITY (N/Nm)	520	520	520	56	56	56

SPECIFICATIONS	
EXCITATION MAX. (V)	+24V
OVERLOAD CAPACITY (%F.S.)	1000
LOWEST FREE AIR RESONANT FREQ. (HZ.)	1250
CROSSTALK - WITH ADJUSTMENT (%F.S.)	1.0
NON-LINEARITY (%F.S.)	0.2
HYSTERESIS (%F.S.)	0.2
OPERATING TEMP. RANGE (°C)	-40 TO +100
COMPENSATED TEMP. RANGE (°C)	10 TO 70
MASS (KG)	0.69

SUNRISE INSTRUMENTS

www.srisensor.com

SIX AXIS LOADCELL WITH OL STOPS
IP60,ETHERNET TCP/IP OUTPUT

UNLESS OTHERWISE SPECIFIED DIMENSIONS ARE IN MM

M3816EHE

REV. A