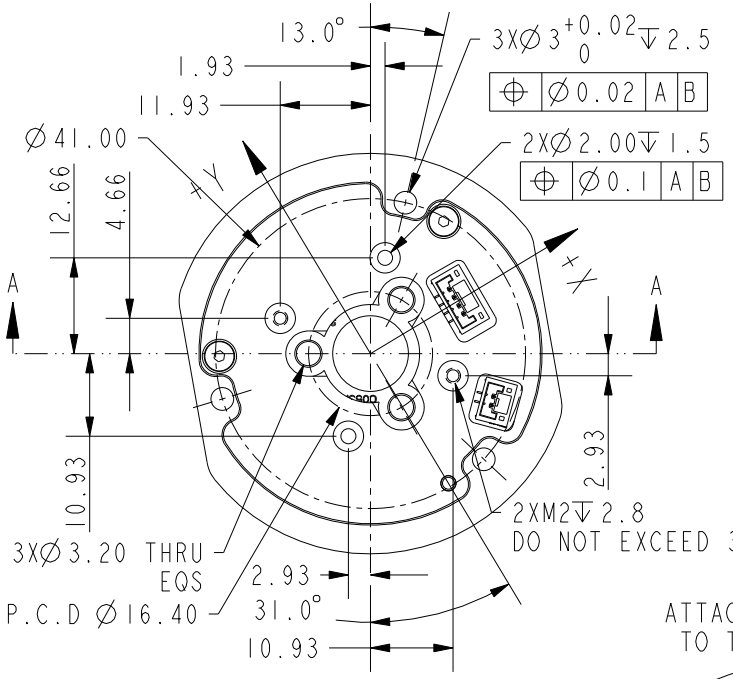

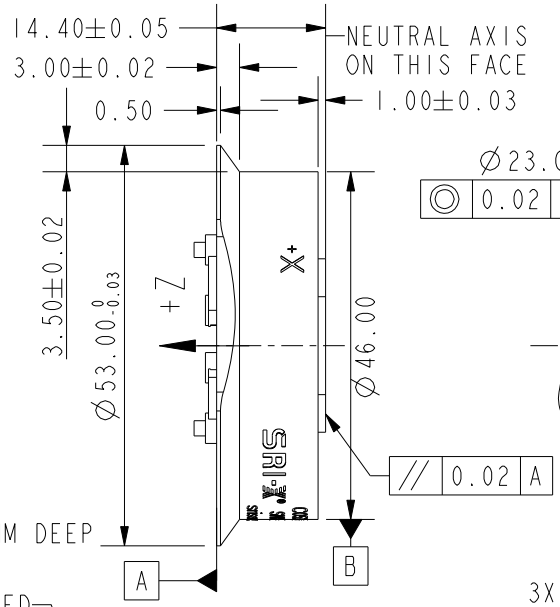

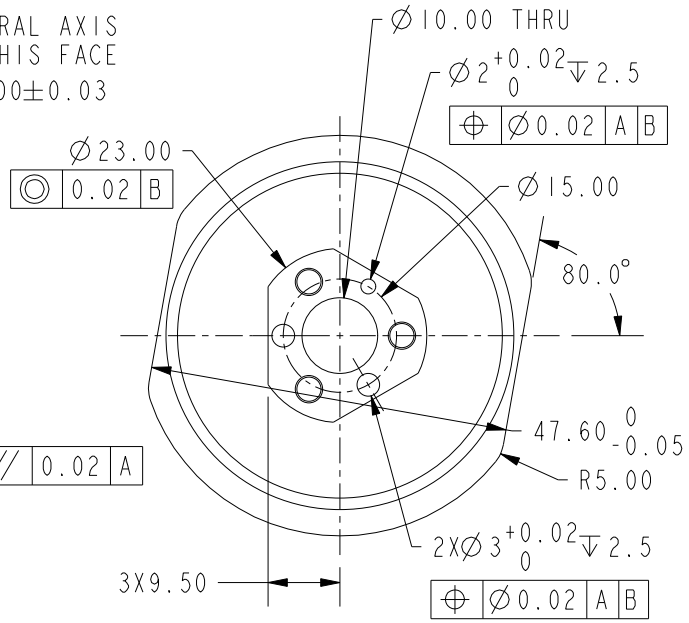

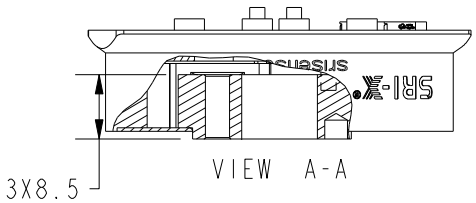

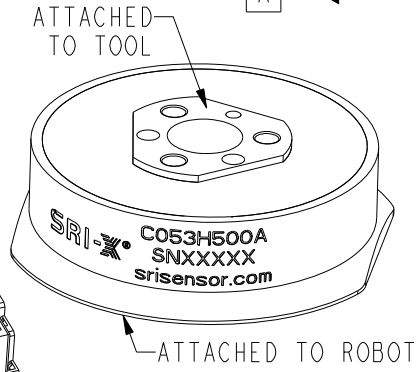

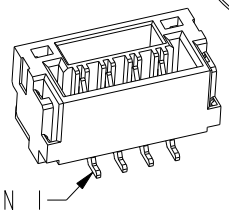

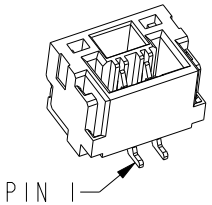

51468-004XX-XXX CONNECTOR PIN ASSIGNMENT	
NO.	FUNCTION
1.	CAN_L
2.	CAN_H
3.	GND
4.	DC 9~36V(TYP 24V)

51468-002XX-XXX CONNECTOR PIN ASSIGNMENT	
NO.	FUNCTION
1.	CAN_L
2.	CAN_H

	Fx	Fy	Fz	Mx	My	Mz
CAPACITY (N/Nm)	500.0	500.0	900.0	30.0	30.0	30.0

SPECIFICATIONS	
POWER SUPPLY	DC 9~36V(TYP 24V)
OVERLOAD CAPACITY (%F.S.)	400
CROSSTALK (%F.S.)	2.5
NON-LINEARITY (%F.S.)	0.5
HYSTERESIS (%F.S.)	0.5
OPERATING TEMP. RANGE (°C)	-40 TO +90
COMPENSATED TEMP. RANGE (°C)	10 TO 70
IP PROTECTION	IP60
MASS (KG)	0.1

SUNRISE INSTRUMENTS

www.srisensor.com

SIX AXIS CIRCULAR LOAD CELL
D53MM, CANFD

UNLESS OTHERWISE SPECIFIED DIMENSIONS ARE IN MM

C053H500A

REV. 0.1